Parts List			
ITEM	QTY	PART No.	DESCRIPTION
1	1	BB5852	Ø35 Top Plate DP Rec 10K wInductive Interface
2	1	BA8399	250W Inductive Connector Primary Side wFlange RS232
3	1	BA1058	Ø35 QP Rec 10K Interv wCV BSP 1/2" ID8mm
4	18	100119	M6x25 Socket Head Bolt DIN 912 A4-80

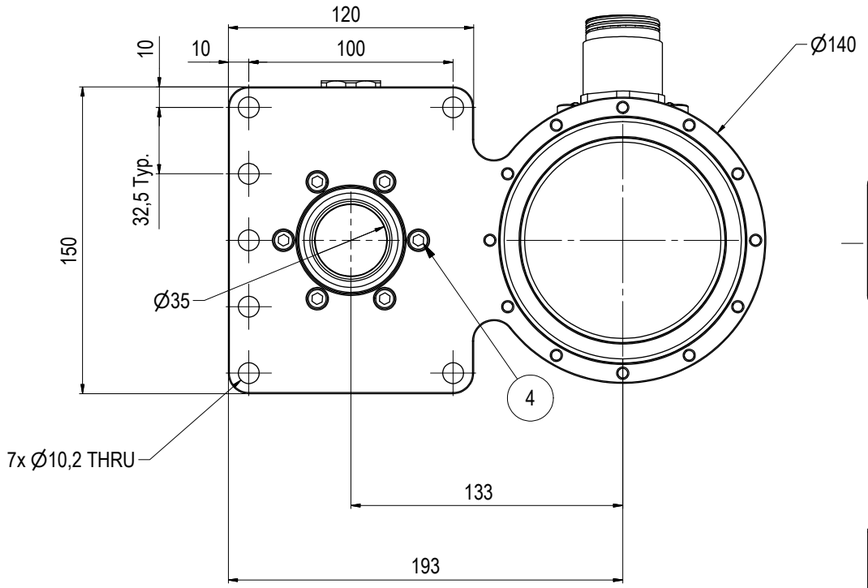

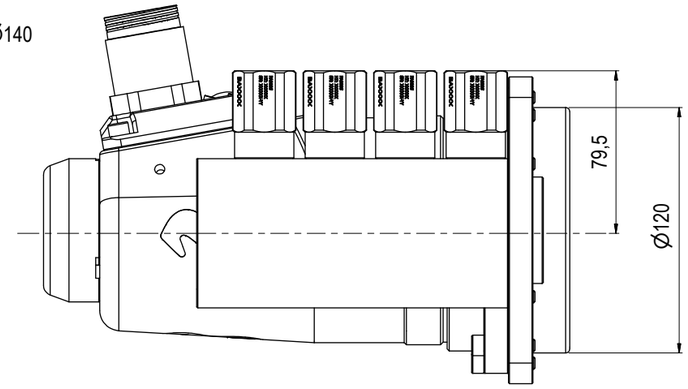

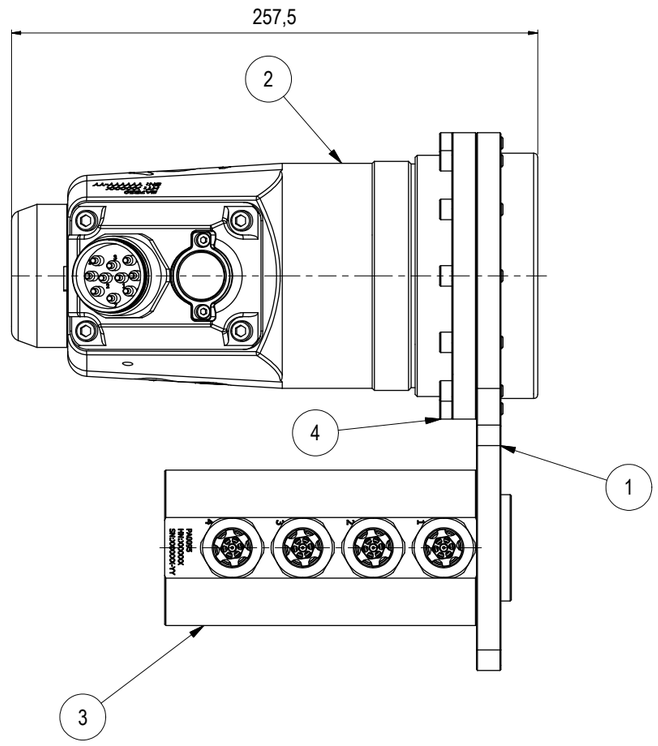

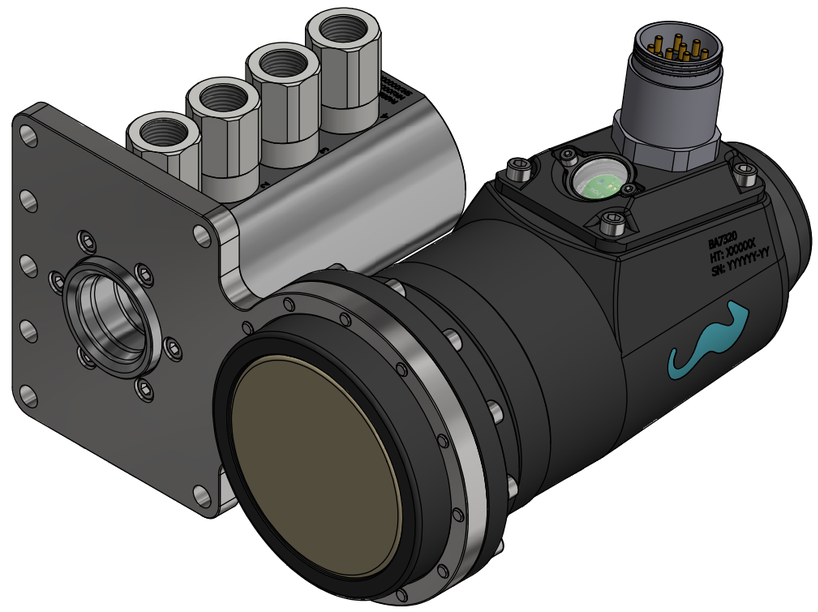

NOTE: 1
DESIGN CODE:
API 17H Type 1

NOTE: 2
TECHNICAL CLASSIFICATION:

Article Type:	001-Hot Stabs
Main Group:	1.01. Ø35 Hot Stab
Intermediate Group:	1.1.02. Receptacle
Sub Group:	1.1.2.04. Quad

NOTE: 3
INTERFACE INFORMATION:

Pressure Rating Bar:	690
Design Water Depth:	N/A
Material:	Intervention
Weight in Air:	10,7 kg
Volume:	3,32 dm^3
Submerged Weight:	7,34 kg
Surface Area:	9616 cm^2
Hydraulic:	BSP 1/2"
Mechanical:	N/A
Electrical:	Subconn BCR2410M
Com. & Protocol:	RS232/Ethernet

Rev.	Date	Reason for issue	Revision change	Made	Chk'd	Appr.
01	13.3.2025	9-IFU (Issued for Use)		HNJ	TAN	HNJ

BLUE LOGIC

This Drawing is the Property of Blue Logic AS © and must Not be Loaned, Reproduced or Transferred to others without written Permission

Dwg Scale: NTS
Dwg Proj:
Dwg Format: A3

Drawing title: Ø35 QP Rec 10k w250W Inductive Connector

Drawing number: BC2568

Rev. 01